RIEX

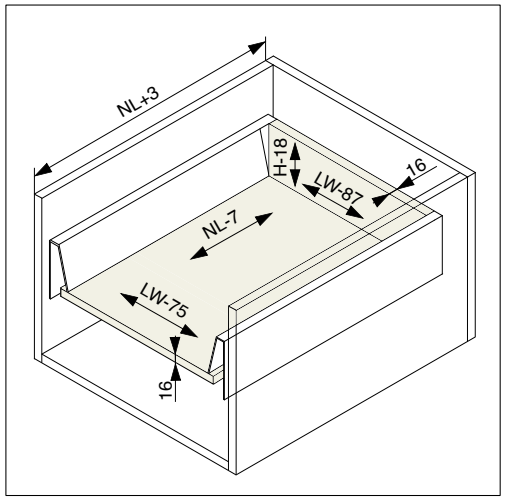

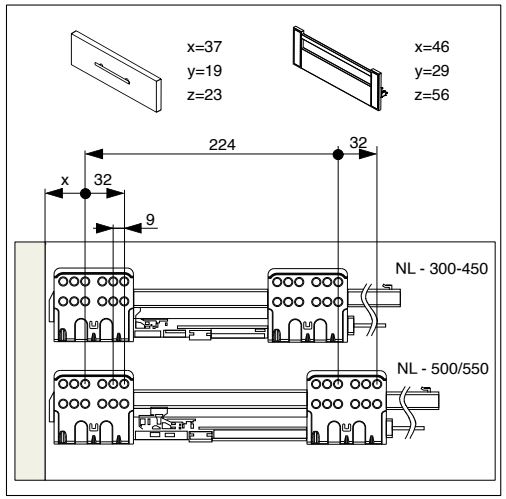

H=86

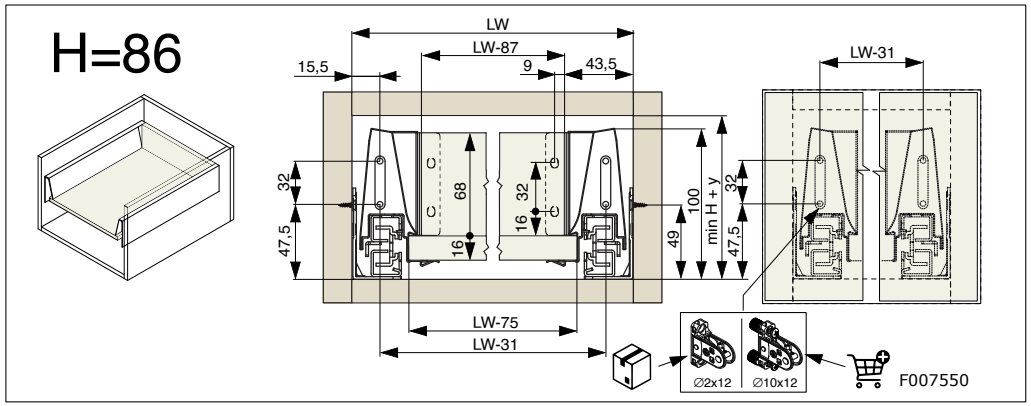

H=137

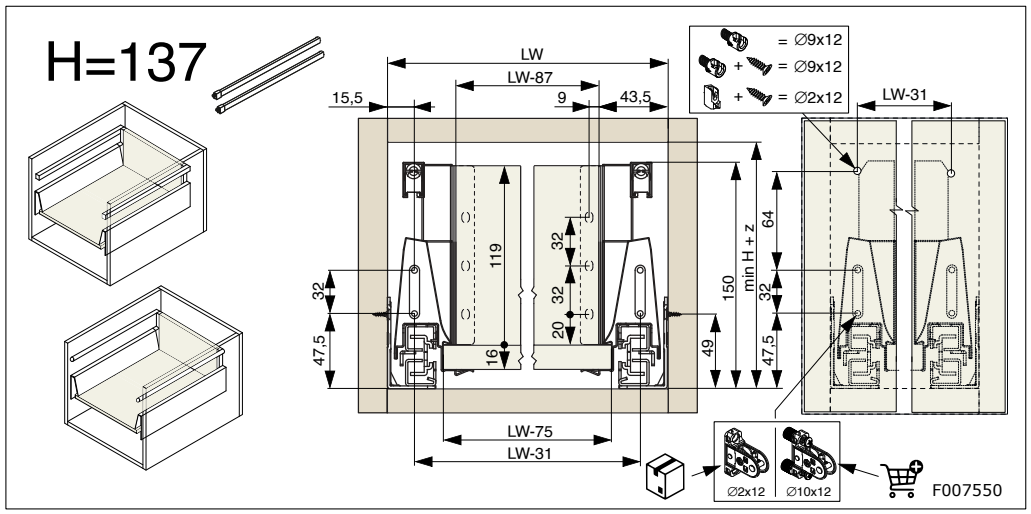

H=201

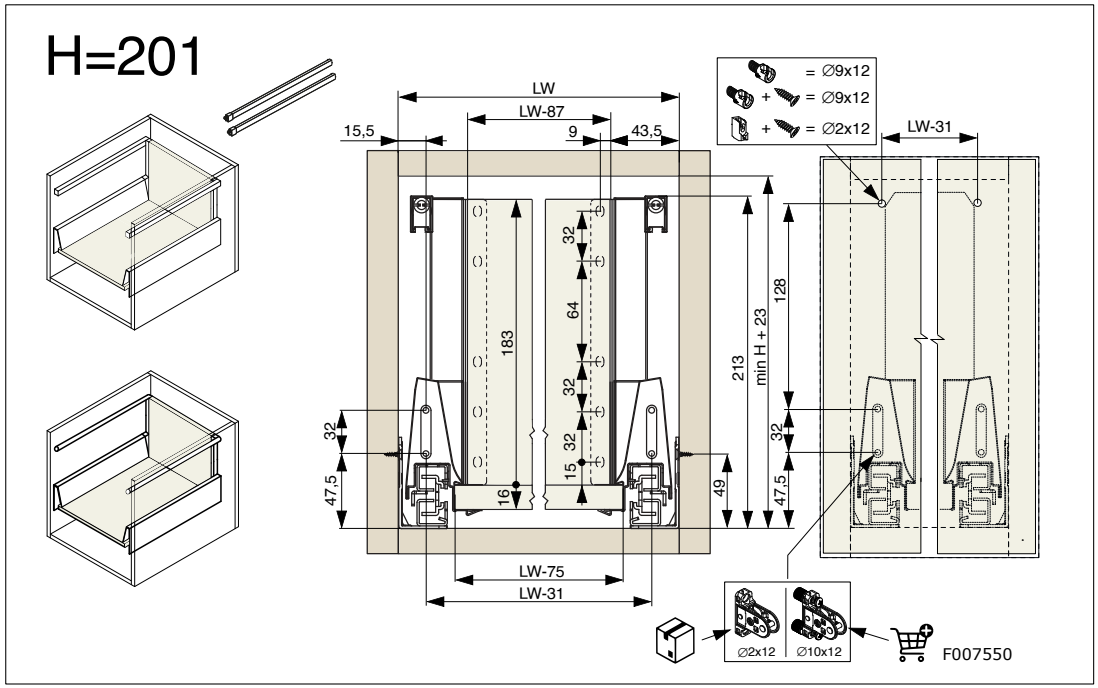

H=201

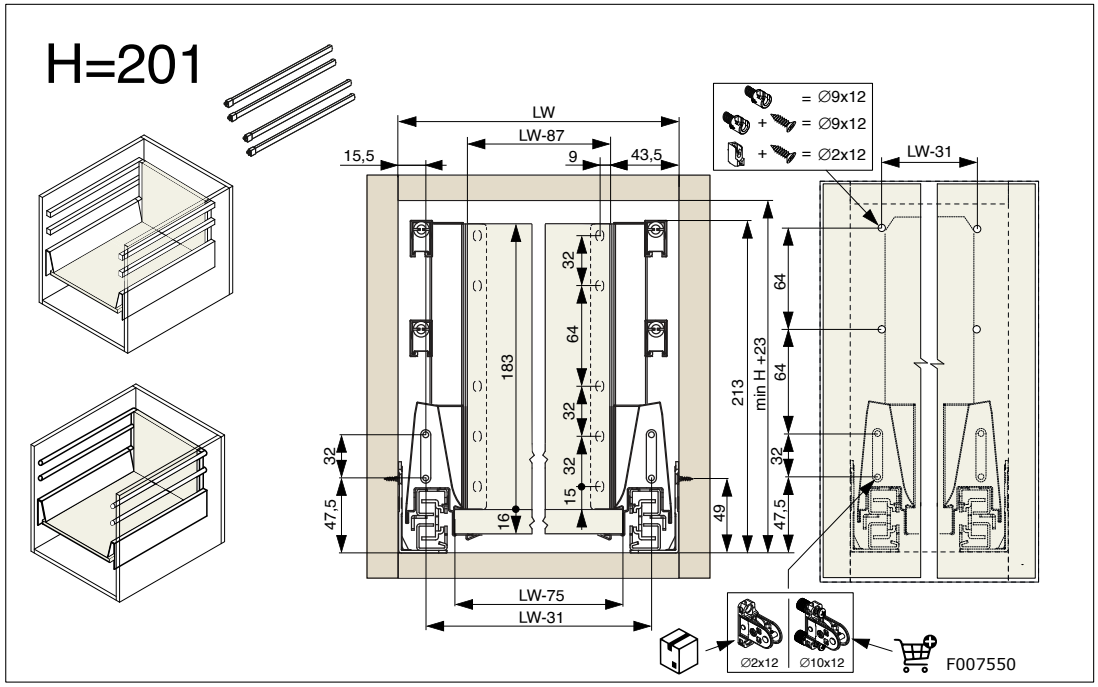

rev08

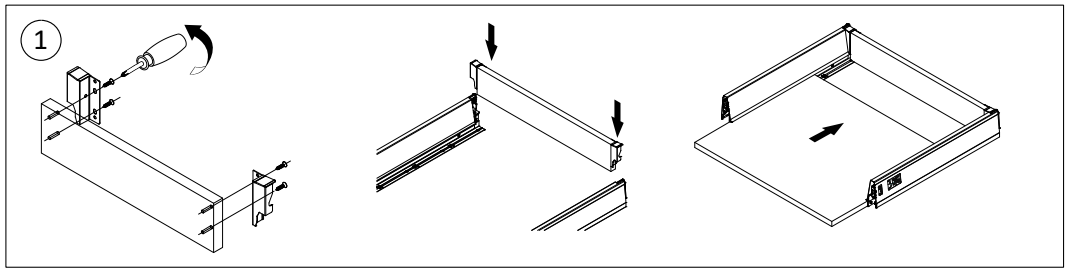
1

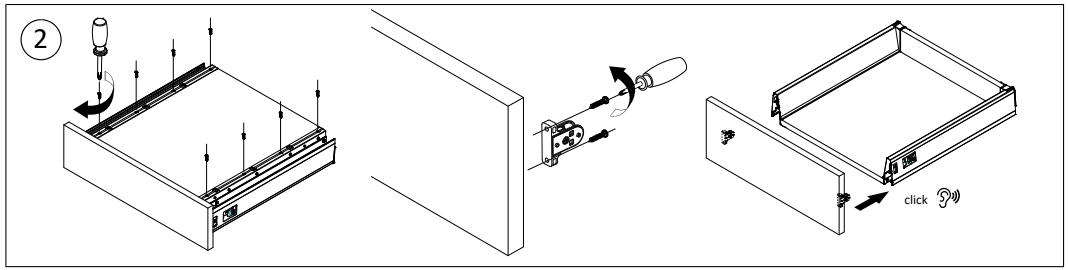
2
click

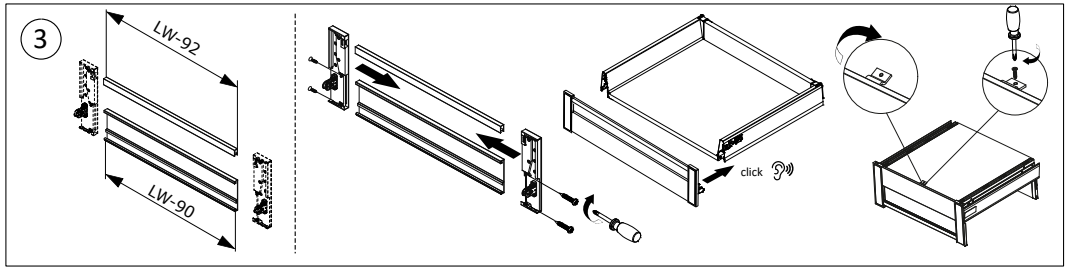
3
LW-92
LW-90
click

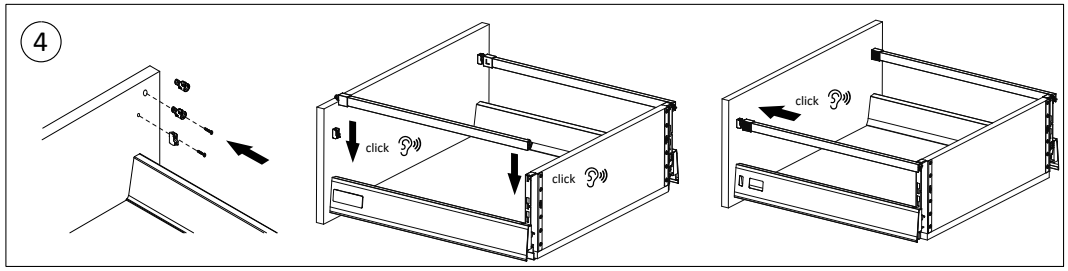
4
click
click
click

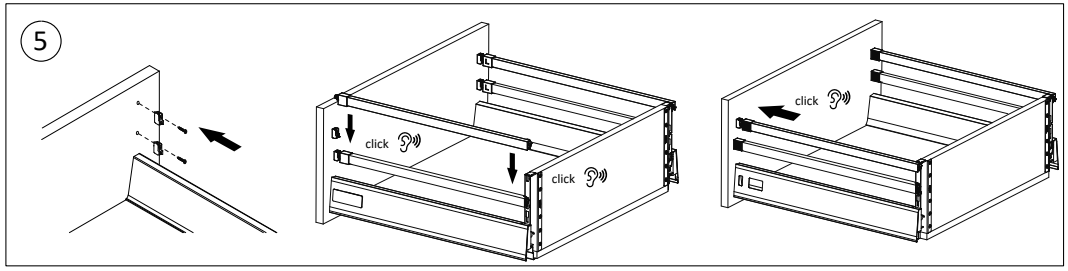
5
click
click
click

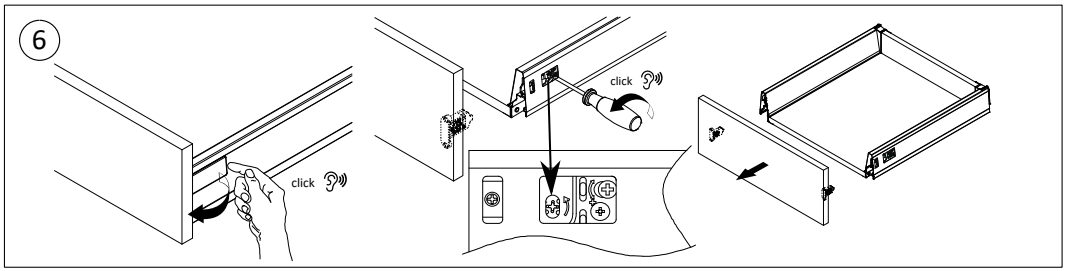
6
click
click

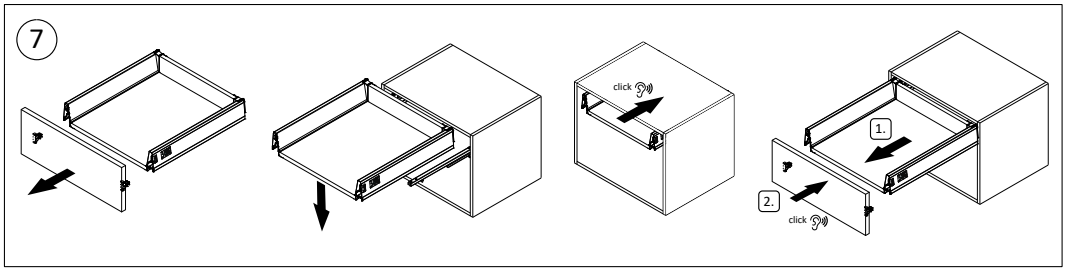
7
click
1.
2.
click

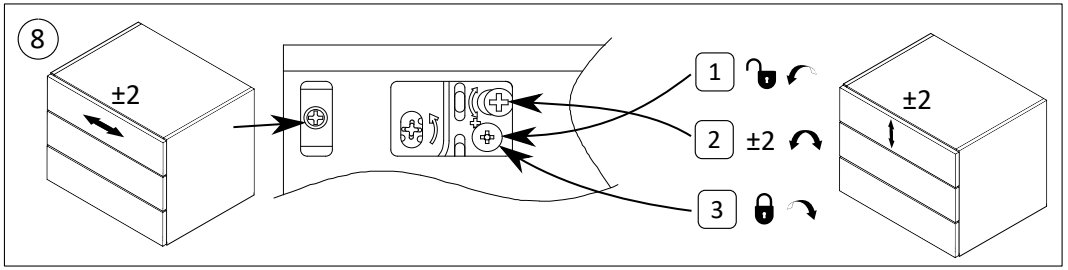
8
±2
1
2 ±2
3
±2

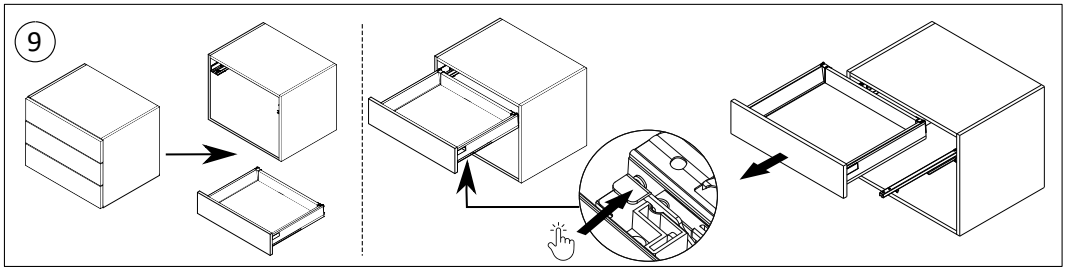
9

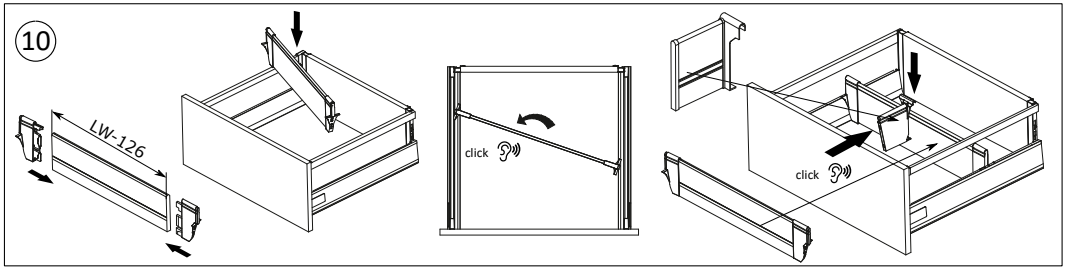
10
LW-126
click
click

rev08